HP.CN

Neo Gravity Airbrush

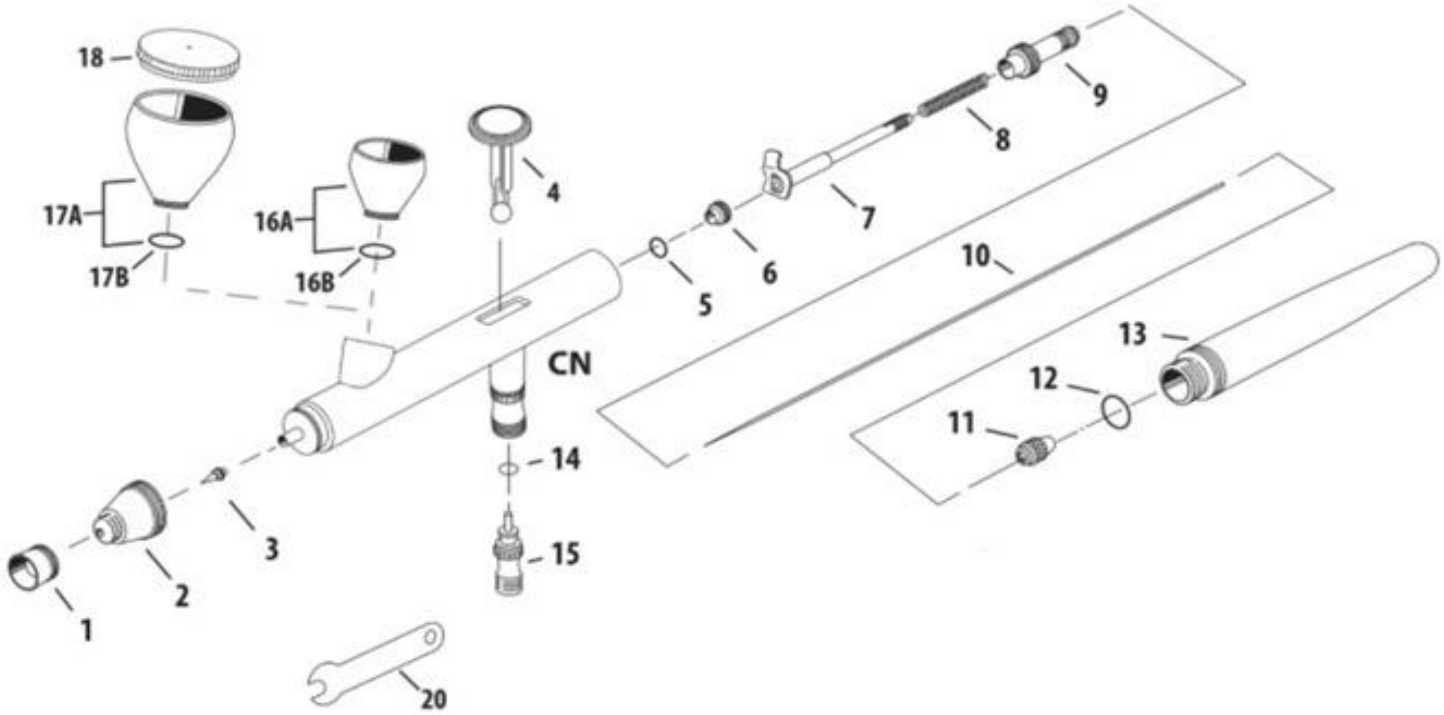

ITEM NO.	PART NO.	DESCRIPTION	ITEM NO.	PART NO.	DESCRIPTION
1	N1101	Needle Cap	13	N0901	Handle
2	N1401	Nozzle Cap	14	N1502	Air Valve O Ring
3	N0801	Nozzle	15	N0201	Valve Set with Valve Spring
4	N1001	Main Lever	16A	N0701	Gravity Cup 3ml
5	N1501	Needle Packing (PTFE)	16B	N0712	Gravity Cup O Ring 3ml
6	N1251	Needle Packing Screw	17A	N0702	Gravity Cup 7ml
7	N1151	Needle Chucking Guide	17B	N0713	Gravity Cup O Ring 7ml
8	N1351	Needle Spring	18	N0954	Gravity Cup Lid
9	N1701	Spring Guide	20	N1651	Spanner
10	N0751	Needle			
11	N1201	Needle Chucking Nut			
12	N1051	Needle O Ring			

Updated: March 2021